Profile 8 80x80 2N light, natural | Cut length

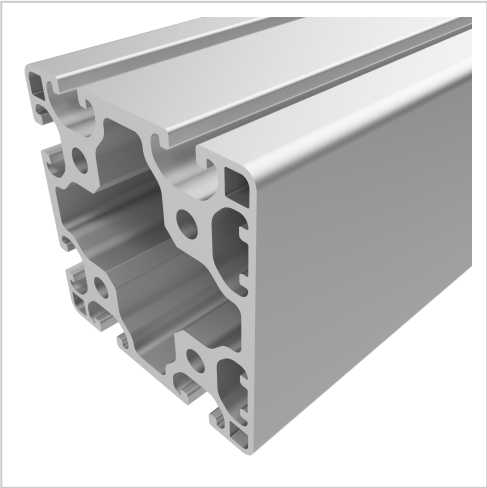

Profil 8 80x80 2N leicht, natur kaufen – 0.0.457.52 kompatibel mit Aluprofilen. Jetzt sparen in unserem Onlineshop !

Product number	PI-1185 SZ
Weight	5.42kg

Product description

The profiles 8 light with closed grooves are suitable for assemblies of all kinds. With the closed groove side, visually appealing and low-maintenance constructions can be realised. The grooves and core holes of Profiles 8 are designed for M8 screws.
Cut to size max. 6000 mm

Product properties

Compatible with	item
Nutauszugskraft	F=2.500 N
Breite Profil	80 mm
Höhe Profil	80 mm
Groove shape	1 side closed
Profile length	Cut length
Series	Series 8
Size	80x80 mm
Contour	Square
Delivery unit	Cuts
Execution	light
Colour	natural
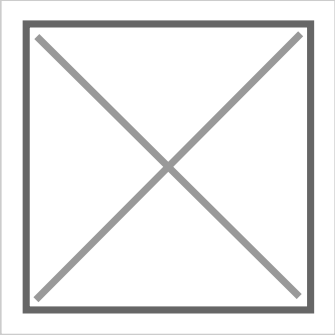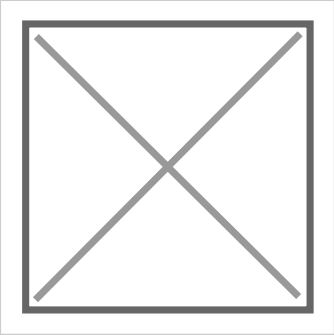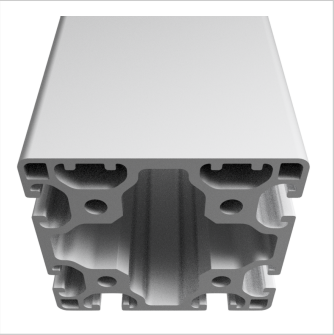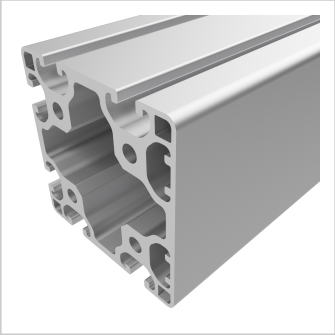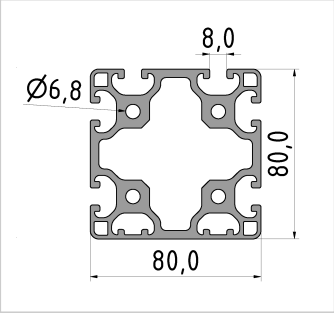
More images