Profile 8 40x40 1N light, natural | Cut length

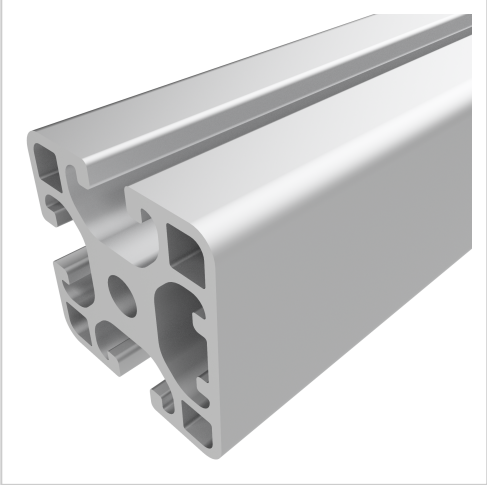

Profil 8 40x40 1N leicht, natur kaufen – 0.0.422.72 kompatibel mit Aluprofilen. Jetzt sparen in unserem Onlineshop !

Product number	PI-1300 SZ
Weight	1.812kg

Product description

The profiles 8 light with closed grooves are suitable for assemblies of all kinds. With the closed groove side, visually appealing and low-maintenance constructions can be realised. The grooves and core holes of Profiles 8 are designed for M8 screws.

Cut to size max. 6000 mm

Product properties

Compatible with	item
Breite Profil	40 mm
Höhe Profil	40 mm
Groove shape	1 side closed
Profile length	Cut length
Series	Series 8
Contour	Square
Delivery unit	Cuts
Execution	light
Size	40x40 mm
Colour	natural
Key-width	2,5 mm
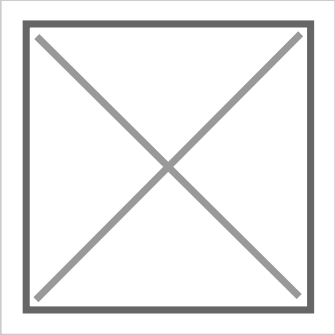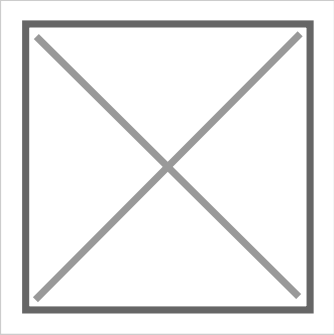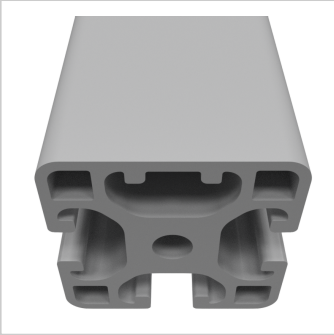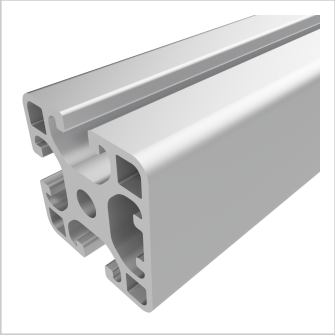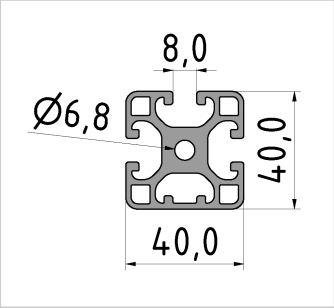
More images