Double Castor D75 swivel, bright zinc-plated

Doppel Lenkrolle D75, verzinkt kaufen Jetzt sparen in unserem Onlineshop !

Product number	ZI-1509
Weight	0.6kg

Product description

Swivel and fixed castors are used on assemblies and frames of all kinds. They have very good rolling characteristics and are highly resilient. The castors are resistant to many environmental influences. Especially for use in electrical production, many castors are also available in ESD versions. The ESD version has a discharge resistance of 110 Ohm.

Product properties

Roll type	Swivel castor
Mounting type	Back hole
Compatible with	item
Part type	Apparatus castors
Roller diameter	Ø 75 mm
Series	Series 8
Load capacity	100 kg
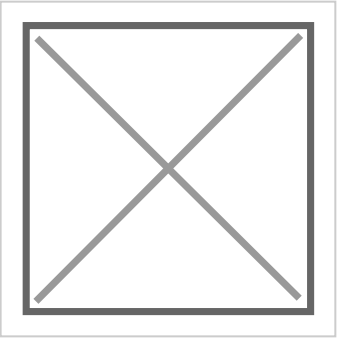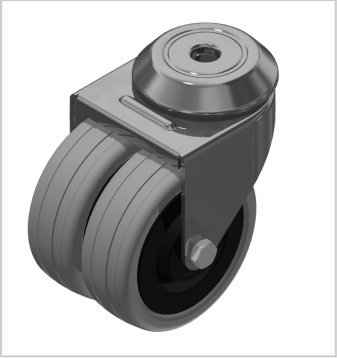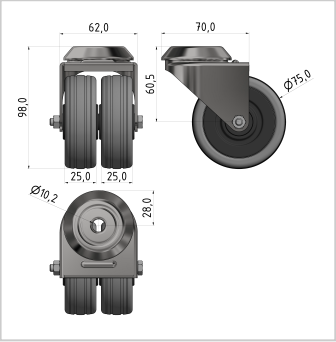
More images