Cover Profile 8, white aluminium | white aluminium

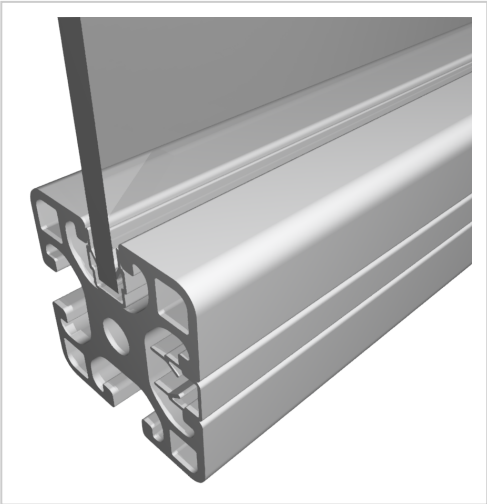

Abdeck- und Einfassprofil 8, weißaluminium kaufen Jetzt sparen in unserem Onlineshop !

Product number	ZI-1275 SN2000-AL
Weight	0.052kg
Length	2000mm

Product description

The cover and edging profiles made of flexible plastic are used for various applications. As a cover profile, it protects the profile groove against dust and dirt. As an edging profile with the U-side facing outwards, it is used to hold panel elements. Pane size: clear inside dimension +21.0 mm

Product properties

Compatible with	item
Delivery unit	Rods
Series	Series 8
Panel width	4-6 mm
Profile length	2000 mm bar
Part type	Cover-and Reduction Profile
Material	PP
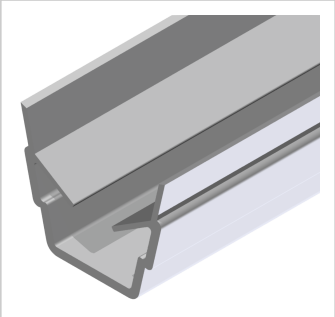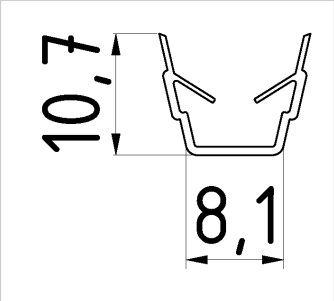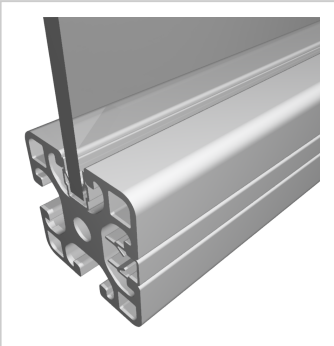
More images