Profile 8 80x40 2N180 light, natural | Cut length

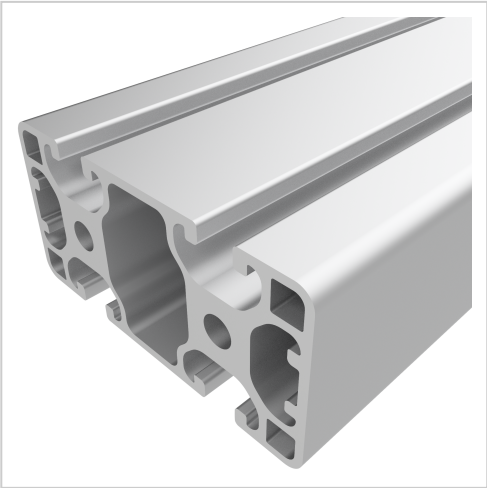

Profil 8 80x40 2N180 leicht, natur kaufen Jetzt sparen in unserem Onlineshop !

Product number	PI-1340 SZ
Weight	3.13kg

Product description

The profiles 8 light with closed grooves are suitable for assemblies of all kinds. With the closed groove side, visually appealing and low-maintenance constructions can be realised. The grooves and core holes of Profiles 8 are designed for M8 screws.
Cut to size max. 6000 mm

Product properties

Material	Al Mg Si 0.5 F25, artificially aged
Anodised	E6EV1 10-15 µm silver
Tolerances	EN 12020-2
Compatible with	item
Breite Profil	80 mm
Höhe Profil	40 mm
Profile length	Cut length
Series	Series 8
Delivery unit	Cuts
Execution	light
Groove shape	2 sides closed 180°
Contour	Rectangular
Colour	natural
Size	80x40 mm
Key-width	2,5 mm
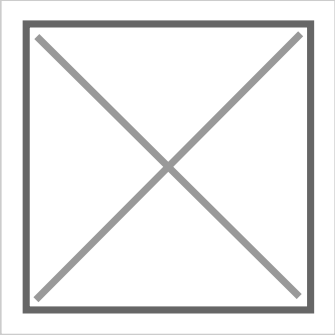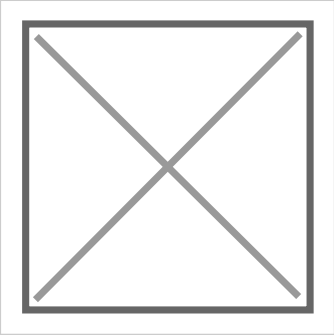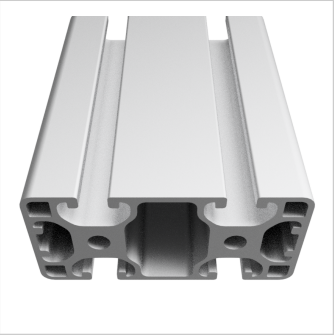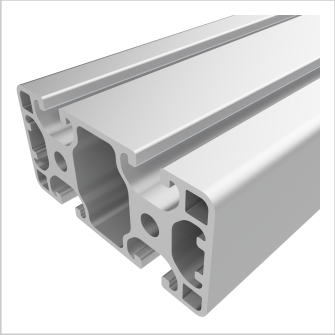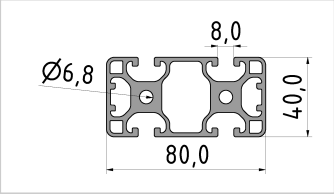
More images