Castor fixed D75 ESD

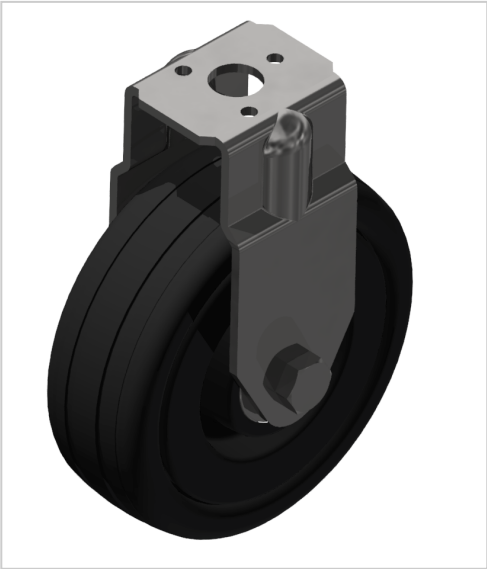

Bockrolle D75 ESD kaufen – 0.0.420.13 kompatibel mit Aluprofilen. Jetzt sparen in unserem Onlineshop !

Product number	ZI-1506
Weight	0.229kg

Product description

Swivel and fixed castors are used on assemblies and frames of all kinds. They have very good rolling characteristics and are highly resilient. The castors are resistant to many environmental influences. Especially for use in electrical production, many castors are also available in ESD versions. The ESD version has a discharge resistance of 110 Ohm.

Product properties

Roll type	Fixed castor
Mounting type	Back hole
Compatible with	item
Part type	Apparatus castors
Roller diameter	Ø 75 mm
Series	Series 8
Colour	ESD
ESD discharging	Yes
Load capacity	50 kg
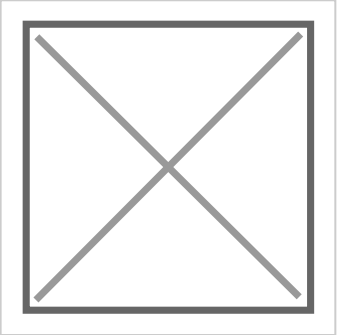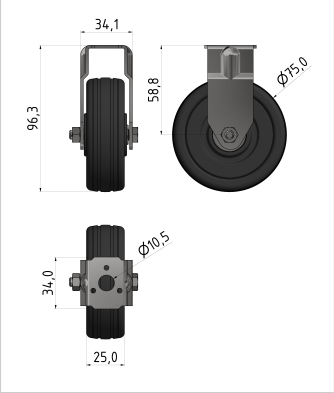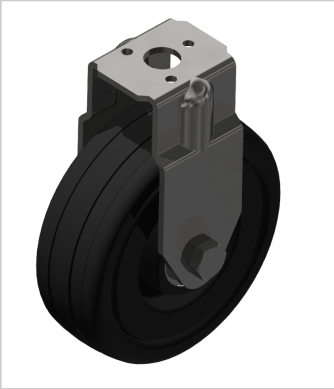
More images