Profile 8 80x40 2N180 E, natural | Cut length

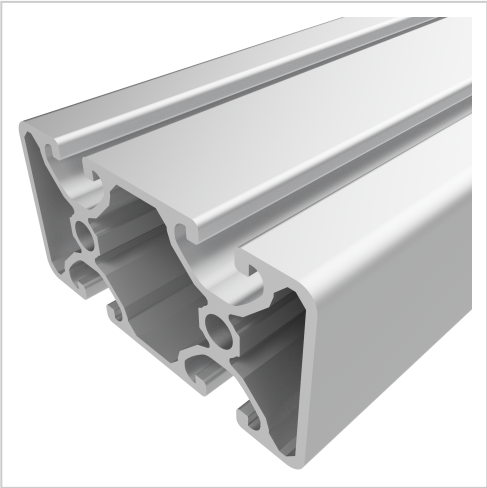

Profil 8 80x40 2N180 E, natur kaufen – 0.0.452.98 kompatibel mit Aluprofilen. Jetzt sparen in unserem Onlineshop !

Product number	PI-1356 SZ
Weight	2.122kg

Product description

The profiles 8 E with closed grooves are suitable for assemblies of all kinds. With the closed groove side, visually appealing and low-maintenance constructions can be realised. The grooves and core holes of Profiles 8 are designed for M8 screws.
Cut to size max. 6000 mm
Compatible with item 7.0.000.23

Product properties

Compatible with	item
Nutauszugskraft	F=1.750 N
Breite Profil	80 mm
Höhe Profil	40 mm
Profile length	Cut length
Series	Series 8
Delivery unit	Cuts
Groove shape	2 sides closed 180°
Contour	Rectangular
Colour	natural
Execution	economy
Size	80x40 mm
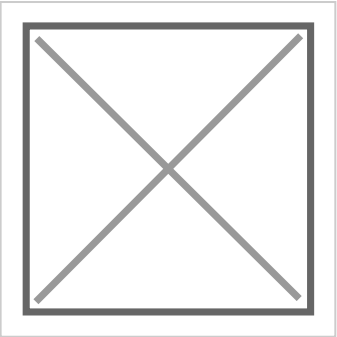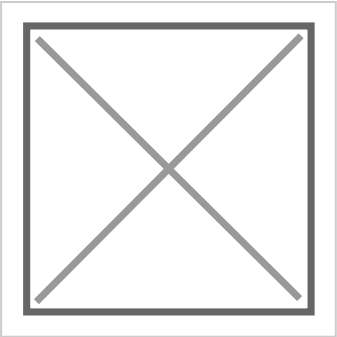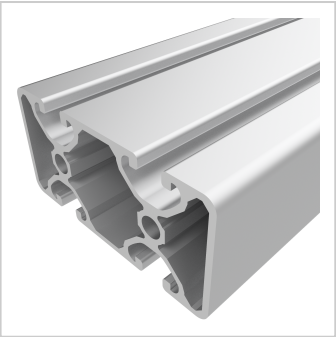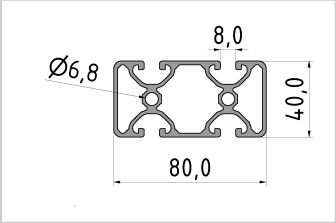
More images