Cube Connector Set 3D 30, white aluminium-8

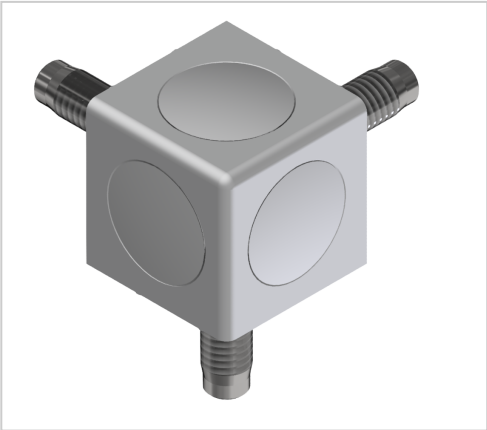

Würfelverbindersatz 3D 30, weißaluminium-8 kaufen – 3 842 549 864 kompatibel mit Bosch-Geräten. Jetzt sparen in unserem Onlineshop !

Product number	VB-2160-WA
Weight	0.055kg

Product description

Connecting sets enable the construction of visually appealing 3D room corners with 3 profiles or a corner angle with 2 profiles. A thread must be drilled into the end face of the corner profiles.

Product properties

Compatible with	Bosch
Part type	Connector
Verbindungsart	Raumverbinder
Connector type	Corner connectors
Colour	white aluminium
Series	Series 30 8
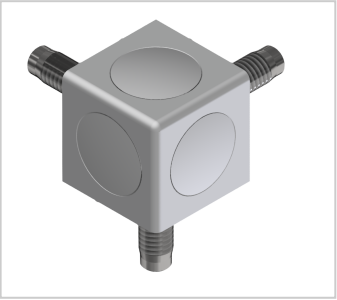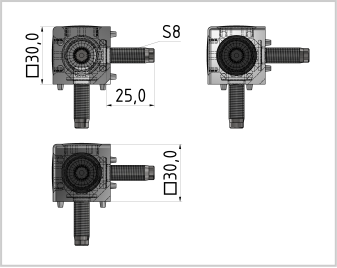
More images