# Profile 8 40x40-45°, natural | Cut length

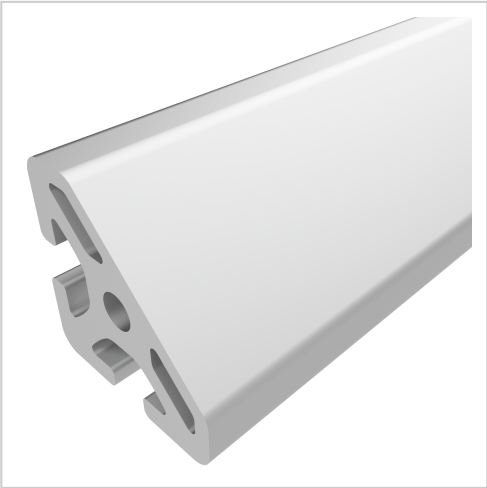

Profil 8 40x40-45°, natur kaufen – 0.0.373.45 kompatibel mit Aluprofilen. Jetzt sparen in unserem Onlineshop !

| | |
|---|---|
| **Product number** | PI-1100 SZ |
| **Weight** | 2.016kg |

## Product description

Profiles 8 are suitable for assemblies of all kinds. Due to the different profile geometries, the material requirements can be adapted to the application. The grooves and the core holes of the profiles 8 are designed for M8 screws.
Cut to size max. 6000 mm

## Product properties

| | |
|---|---|
| **Material** | Al Mg Si 0.5 F25, artificially aged |
| **Anodised** | E6EV1 10-15 µm silver |
| **Tolerances** | EN 12020-2 |
| **Compatible with** | item |
| **Nutauszugskraft** | F=5.000 N |
| **Breite Profil** | 40 mm |
| **Höhe Profil** | 40 mm |
| **Groove shape** | 1 side closed, Angle bracket profile |
| **Profile length** | Cut length |
| **Series** | Series 8 |
| **Delivery unit** | Cuts |
| **Size** | 40x40 mm |
| **Colour** | natural |
| **Contour** | Triangular |
| **Execution** | heavy |
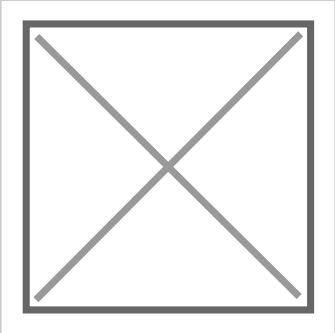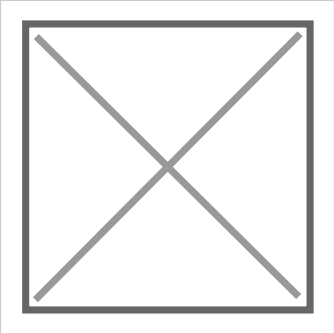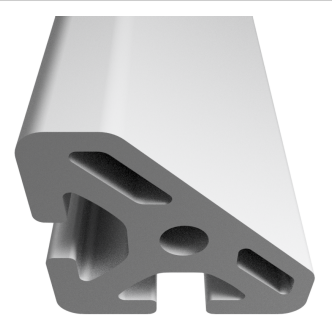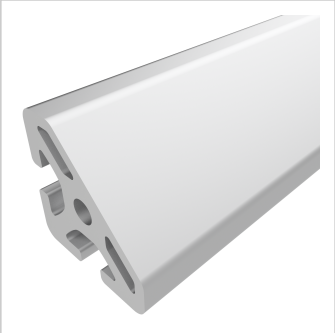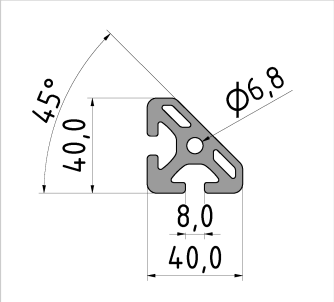
## More images