Castor X D75 swivel with double-brake, grey-8

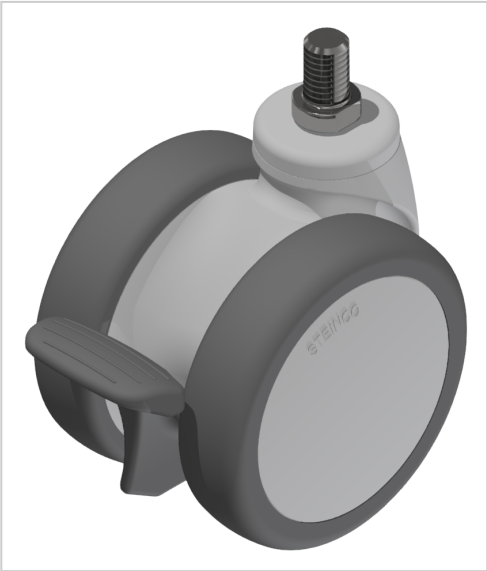

Lenkrolle D75 X PA mit Bremse, grau kaufen Jetzt sparen in unserem Onlineshop !

Product number	ZI-6090
Weight	0.31kg

Product description

Swivel and fixed castors are used on assemblies and frames of all kinds. They have very good rolling characteristics and are highly resilient. The castors are resistant to many environmental influences. Especially for use in electrical production, many castors are also available in ESD versions. The discharge resistance of the ESD version is 110 Ohm.

Product properties

Compatible with	item
Part type	Apparatus castors
Roller diameter	Ø 75 mm
Colour	grey
Load capacity	50 kg
Series	Series 8 Z
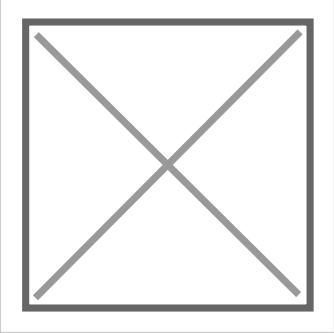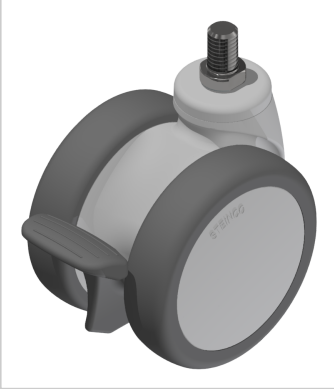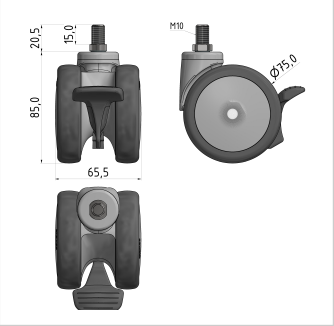
More images