Profile 8 80x40 2N light, natural | Cut length

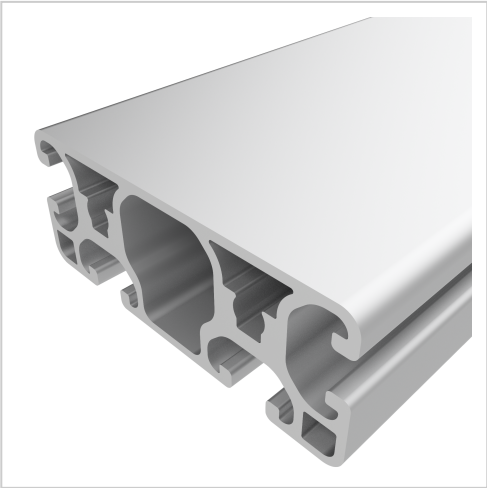

Profil 8 80x32 leicht, natur kaufen – 0.0.494.96 kompatibel mit Aluprofilen. Jetzt sparen in unserem Onlineshop !

Product number	PI-1113 SZ
Weight	13.98kg

Product description

The profiles 8 light with closed grooves are suitable for assemblies of all kinds. With the closed groove side, visually appealing and low-maintenance constructions can be realised. The grooves and core holes of Profiles 8 are designed for M8 screws.
Cut to size max. 6000 mm

Product properties

Size	80x32
Nutauszugskraft	F=2.500 N
Breite Profil	80 mm
Höhe Profil	32 mm
Groove shape	1 side closed
Profile length	Cut length
Series	Series 8
Delivery unit	Cuts
Execution	light
Contour	Rectangular
Colour	natural
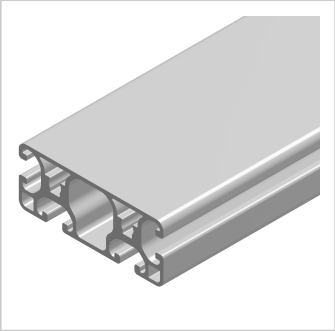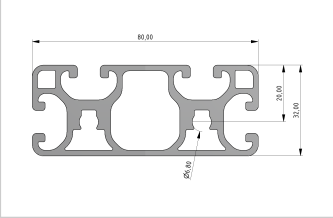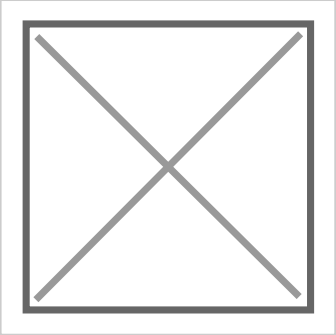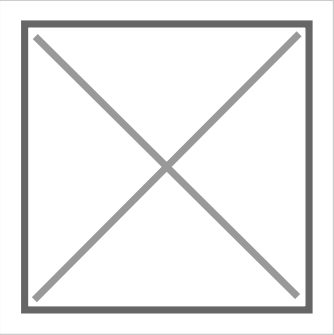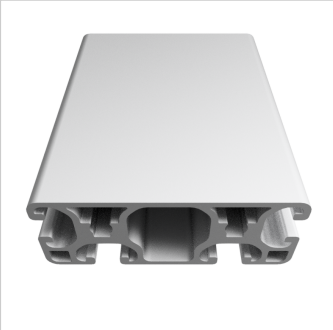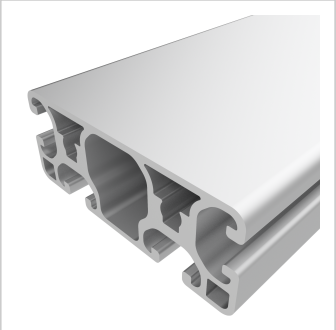
More images